INSTALLATION INSTRUCTIONS FOR SPC HERRINGBONE FLOORING

. All instructions and recommendations must be followed for satisfactory installation and warranty

. Please allow flooring to acclimatize at room temperature (approx. 68-70°F/20-21°C) for 48 hours prior to installation. Carefully check planks for any defects before installation, any pieces that has been installed will be deemed acceptable by the customer.

. Install **SPC herringbone flooring** only after the jobsite has been cleaned and cleared of unneeded building material that may damage a finished installation.

. Mix and install product from several different cartons to achieve desirable plank variation.

. SPC herringbone flooring is designed to be installed as a **5GI locking system**.

. Storage of this product: All cartons containing **vinyl tile** or plank **flooring** should be **stored** on a dry, flat, level surface.

SPC HERRINGBONE FLOOR INFORMATION

. Careful and correct preparation of the **SPC FLOOR** is a major part of a satisfactory installation. **SPC herringbone flooring** is designed using a "floating floor" installation method. Although SPC will bridge minor floor imperfections and gaps; heavy roughness or unevenness in the **SPC FLOOR** may telegraph through the new floor covering.

. Never install **SPC herringbone flooring** products over residual asphalt-type (cut back) adhesive. Residual cut back adhesive should be completely removed and covered with high quality latex underlayment.

. **SPC herringbone flooring** does not require an underlayment pad. It is important that the sub floor is clean and free from dirt or debris.

WOOD SUBFLOORS

. **SPC herringbone flooring** can be installed over many wood substrates that are not suitable for fully adhered products. If they are smooth, flat, and structurally sound and free of deflection, acceptable substrates include, article board, chipboard, flake board and OSB. Caution: Damage may occur on wood panel subfloors during construction. The suitability of these floors is the responsibility of the installer.

. If the surface of the wood subfloor is not smooth, a 1/4" (6.4mm) underlayment panel should be installed over the subfloor. Any panels selected as an underlayment must meet the following criteria

be made smooth by applying an overlay such as cementitious patching or leveling compound. • Existing floors should not be heavily cushioned and not exceed one layer in thickness. • Do not install over carpet. • Floor should be flat, smooth, dimensionally sound and free from deflection.

INSTALLATION

. **SPC herringbone flooring** is designed to be installed as a “floating” floor. Do not secure the planks to the subfloor. Always undercut wood doorjambs. Check local building code for metal door jamb. If they cannot be cut, then proper expansion must be maintained around door jamb.

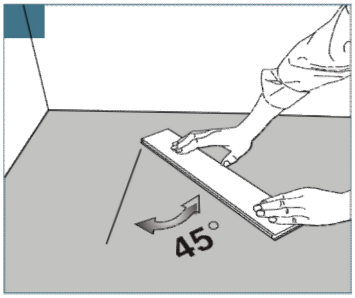

1. Getting started.
Choose a wall to start at and begin installing at the left corner. Start with an A-panel and place it with its long side marking facing the left wall at an angle of 45°. Make sure that the distance between the left wall and the panel is less than the length of one panel.

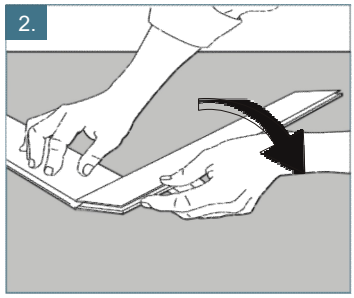

2. Connect next panel
Continue with a B-panel. Press the long side of the B-Panel at an angle against the short side of the previous installed A panel. Fold down the B-panel flat to the floor to lock the panels tightly together. Check that the grooves on the two panels form a continuous line.

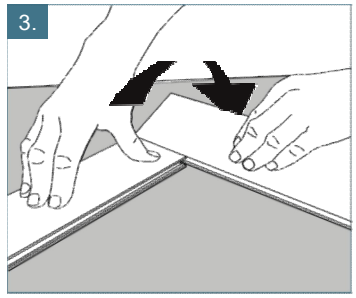

3. Connect additional panels
Next panel is an A-panel. Again, press the long side of the new A-panel at an angle against the short side of the previous B-panel and fold down. Continue like this with as many panels as may fit along the starting wall.

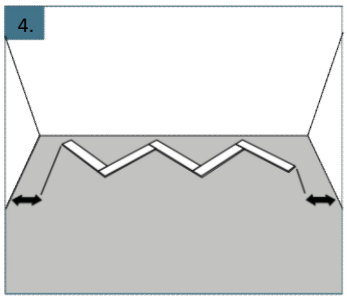

4. Center the first row
Check that the first row of panels is centered along the starting wall. Make sure that the distance to the walls on both sides are less than the length of one panel. If not, add a panel at the right side.

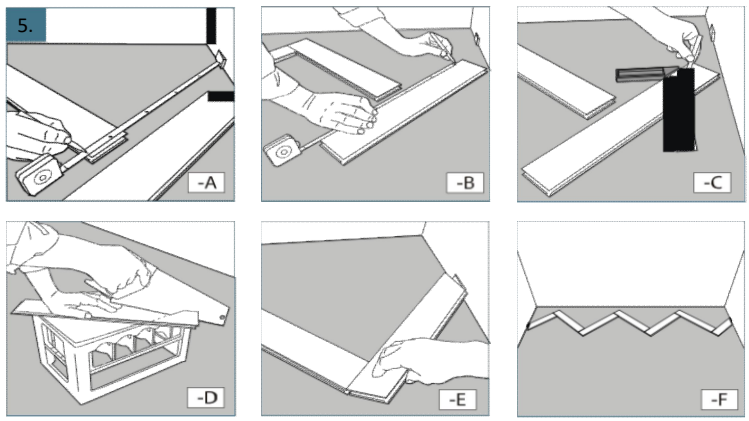

5. Cut the end panels to size
Measure and cut the end panels to size using a fine toothed saw. Finish the first row with the cut end panels. Make sure that you leave a gap of 10mm to each wall.

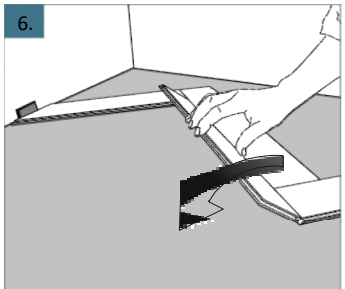

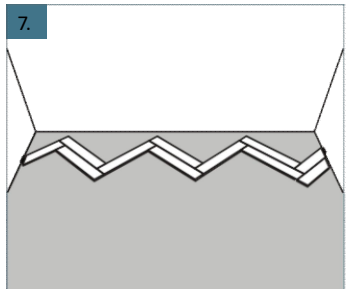

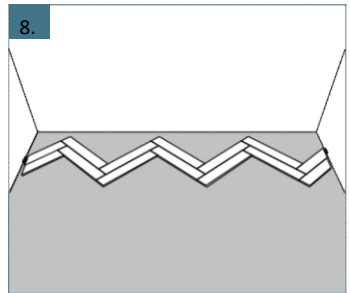

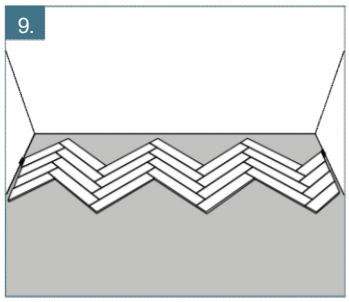

9. Complete four rows
Install additional rows to complete four full rows.

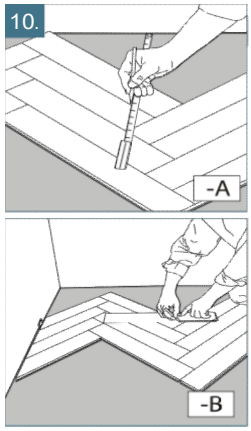

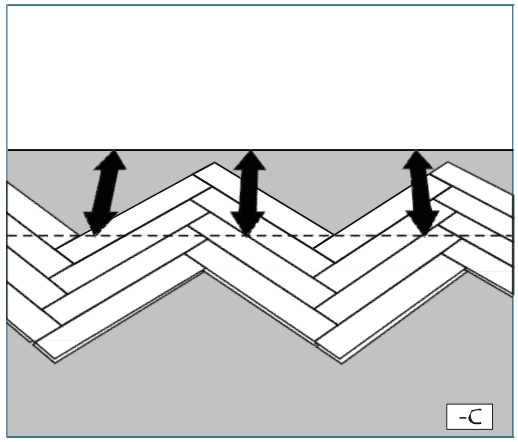

10. Adjust the starting rows
The first four rows have to be cut parallel to the wall. Measure and mark where to cut the floor panels at a fixed / parallel distance to the wall.

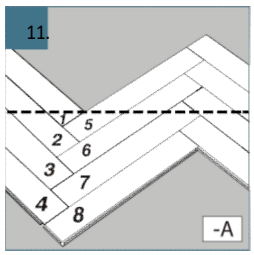

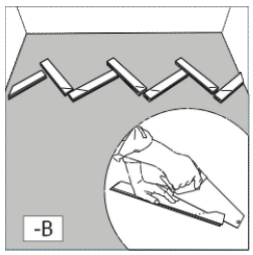

11. Dismantle and cut
Number the panels from **1** to . . . . This will allow you to keep the panels in order. Dismantle the panels and cut them to size along the previous marked line.

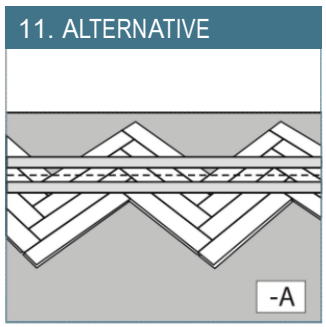

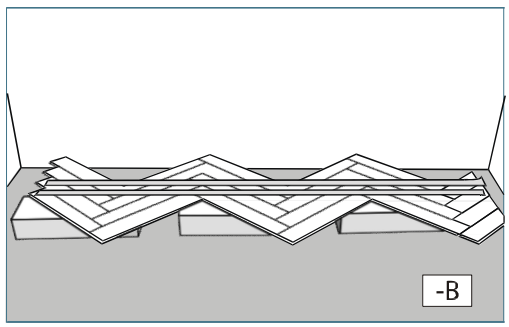

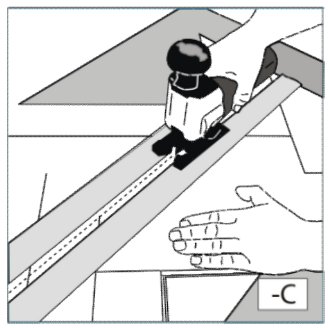

11. Alternative way to cut the first rows
Leave the left end-panels uninstalled. Tape along the marked line and place the flooring on top of a few flooring packages. Cut along the marked line. Then put the adjusted rows into place. Complete the first rows by installing the remaining end-panels. Start with the end-panel in the last row and finish at the first row

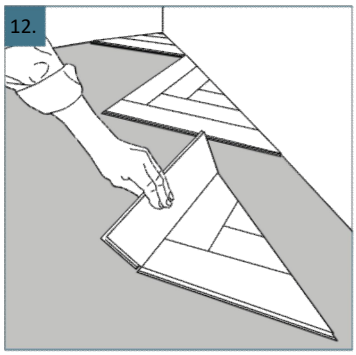

12. Install the starting triangles Connect the cut starting panels to form triangular shapes, one by one.
Start installing the triangles from the left corner. It is recommended to use glue to fix the smallest parts of the triangles into place by applying a small quantity of glue inside.

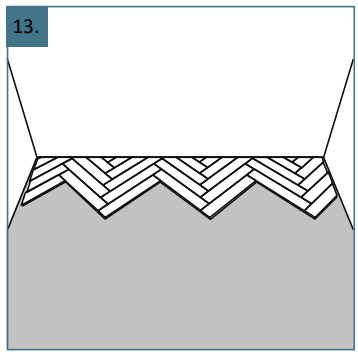

13. Install a few more rows
Connect the triangles by installing a few additional rows of panels. Start each row from the left to the right with the A-panels, finish with the cut piece of panel (step 5) and then install all the B-panels in the row.

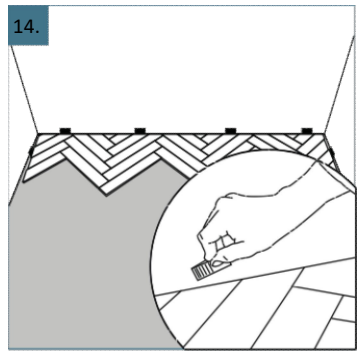

14. Put in spacers
Put in spacers between the flooring and the wall to ensure a expansion gap of 10mm

BML

WARRANTY

SPC herringbone flooring Warranty Program: (keys Collection SPC)

SPC herringbone flooring Warranty Guide recommends that all their floor coverings are professionally installed for a valid warranty.

Warranty products/ Warranty periods

Warranty Coverage	Wear Layer 0.5mm
Manufacturing Defect	Residential Limited 30 Years
Wear and Fade	Commercial 10 years

WARRANTY COVERAGE

*DEFINITIONS / To Be Covered: "Wear" must be through the wear layer to the degree that the printed pattern is affected or altered. "Fade" must be to the degree that the floor is permanently discolored.

The manufacturer warrants that the product will not experience Vinyl layer wear through for the life of the product. Vinyl layer wear –through is defined as 100% vinyl layer wear-through that exposes the core material over a minimum of 3% of the total installation. (Gloss reduction or surface scratches are not considered surface wear)

WARRANTY DOES NOT COVER

Warranty: a) Defects arising from poor installation (this includes - damage arising from sub-floor irregularities, for example excessive unevenness, loose nails or other protrusions; visual surface defects caused by previous floor coverings that should have been removed or covered, for example ceramic or bitumastic tiles, floor-boards, cushioned vinyl, or by failure in the underlayment; seams 'peaking' or opening due to use of incorrect adhesive or seaming method; edge-to-edge shade variation; discoloration arising from installation next to a source of excessive heat); and visible trowel marks.

b) Dissatisfaction due to improper maintenance.